Assemble instruction

A×1

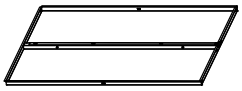

B×1

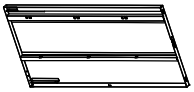

C×1

D×1

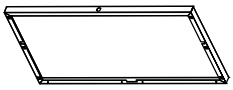

E×1

F×1

G×3

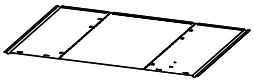

H×3

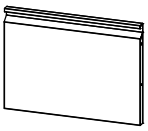

I×3

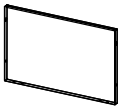

ST4.2X8 8PCS ST4.8X12 4PCS ST2.9×8 3PCS Plastic clip 2PCS

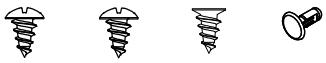

2PCS 1PC 3PC 1PC

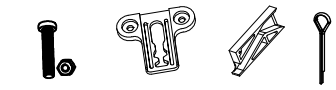

6PCS 1PC 1PC 1PC 1 Pair

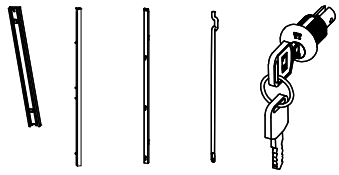

List of carcase parts

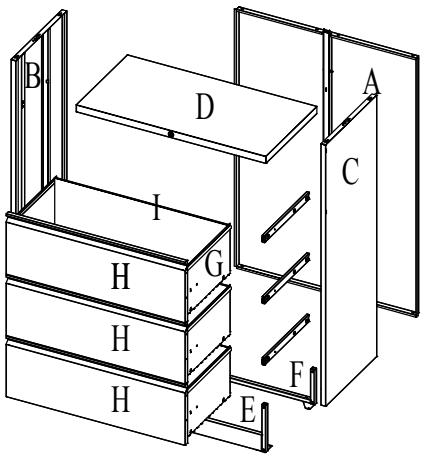

Finish

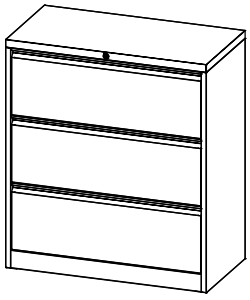

Step 1

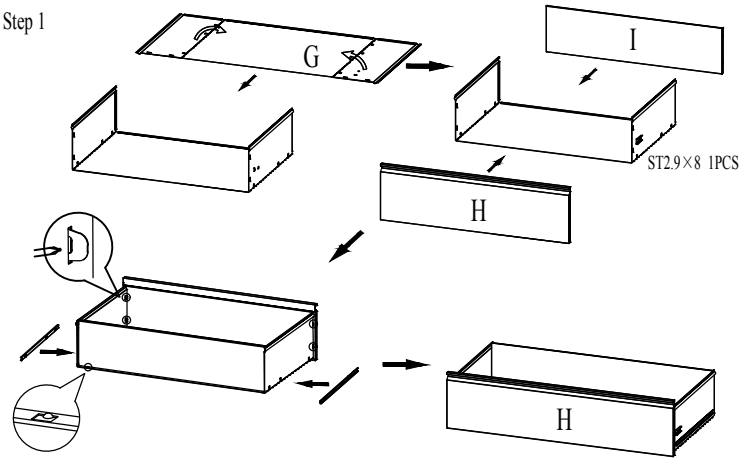

Step 2

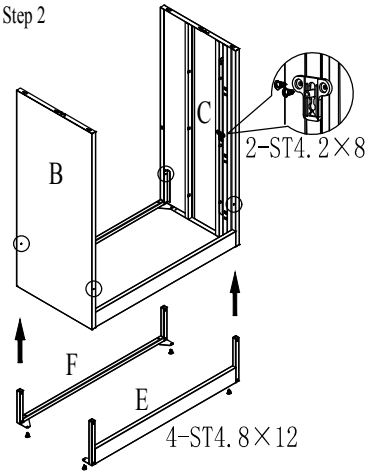

Step 3

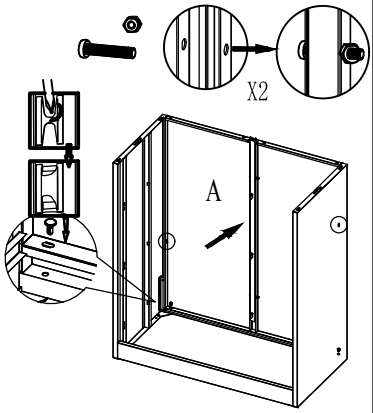

Step 4

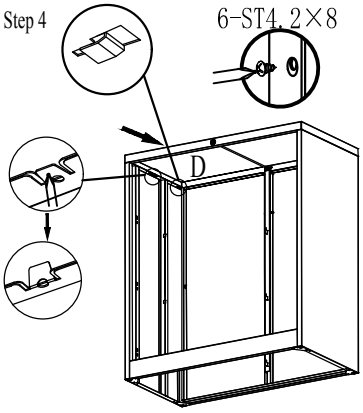

Step 5

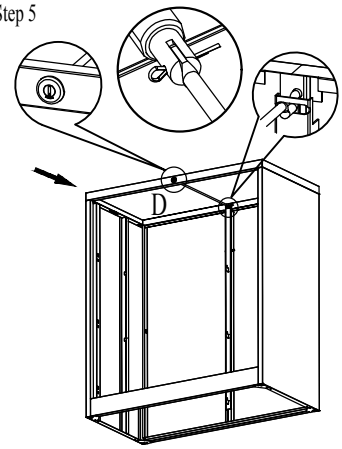

Step 6

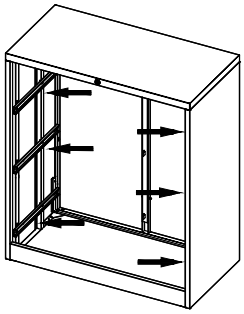
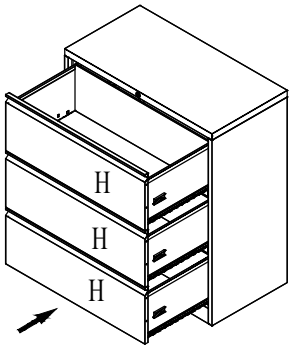
Step7